Section 7. Electromagnetic Interference Requirements

7.1 General

The transponder must meet the EMI requirements of this section when the external diplexer is included in the system configuration. This diplexer must meet the requirements established by Appendix E. The limits will generally be derived from GEVS-SE.

7.2 Conducted Emission (CE)

7.2.1

Conducted emission limits and requirements on power leads shall be as shown in Figures 7-1 and 7-2. Testing shall be in accordance with MIL-STD-462, test numbers CE01 and CE03.

7.2.2

Conducted emissions on the antenna port of the diplexer in key-up (transmitter OFF) mode shall not exceed 34 dBµV for narrowband emissions and 40 dBµV/MHz for broadband emissions. Harmonics and all other spurious emissions from the transmitters in the key-down mode (transmitter ON) shall have peak powers 60 dB down from the power at the fundamental. Testing shall be in accordance with MIL-STD-462, test number CE06. If the MIL-STD-462 test CE06 for conducted emissions on antenna terminals cannot be applied, MIL-STD-462 test RE03 for radiated spurious and harmonic emissions shall be used as an alternative test.

7.3 Radiated Emission (RE)

7.3.1

Unintentional radiated electric field from the transponder must be less than the limit shown in Figure 7-3 for narrowband and Figure 7-4 for broadband emissions. Testing shall be in accordance with MIL-STD-462, test number RE02.

7.3.2

Radiated spurious and harmonic emissions from the transponder shall not exceed the limits specified in paragraph 7.2.2, the same limits as those for conducted emissions on the antenna port of the diplexer. Testing shall be in accordance with MIL-STD-462 test RE03.

7.3.3

Radiated ac magnetic field levels produced by the transponder at a distance of 1 meter away shall not exceed 60 dB above 1 pico-Tesla (dB pT) over the frequency range of 20 Hz to 50 kHz. Testing shall be in accordance with MIL-STD-462, test number RE04.

7.4 Conducted Susceptibility (CS)

7.4.1

The transponder must remain functional when subjected to prime power conducted interference defined in GEVS-SE CS01 and CS02. Test procedures shall be in accordance with MIL-STD-462 tests CS01 and CS02. The test limits shall be as shown in Figure 7-5 for CS01. For CS02, the test limit is 1 volt rms from a 50 Ohm source. The test signal shall be applied to the transponder input terminal. For these limits, the receiver must exhibit no more than 3 dB degradation in the effective S/N_O.

7.4.2

The transponder must remain functional when a transient signal is applied to the power lines in accordance with the procedures of MIL-STD-461C and 462. The applied transient signal should equal the power line level, resulting in a total voltage of 56 volts in the positive direction and 0 volt in the negative direction. The transient should be applied for a duration of 5 minutes at a repetitive rate of 60 pps. The pulse width shall be 10 µs. The repetitive rate less than 60 pps must not cause performance degradation in excess of the level mentioned in paragraph 7.4.1. Testing shall be in accordance with MIL-STD-462 test CS06.

7.4.3

The receiver shall reject undesired signals and shall not degrade more than 3 dB in effective S/N_O performance when subjected to the CS04 test defined in GEVS-SE. Testing shall be in accordance with MIL-STD-462 test CS04.

7.5 Radiated Susceptibility (RS) - Electric Fields

7.5.1

The transponder must remain functional when subjected to radiated electric field with the following levels:

a. 2 V/m from 14 kHz to 30 MHz.

b. 4 V/m from 30 MHz to 2 GHz.

c. 20 V/m from 2 GHz to 18 GHz (except at $F_r \pm 10$ MHz).

7.5.2

For these levels, the receiver must exhibit no more than 3 dB degradation in the effective S/N_o. The Transmitter spurious PM added due to the radiated frequency must not exceed 3 degrees rms. Testing shall be in accordance with MIL-STD-462 test RS03.

7.6 Radiated Susceptibility (RS) - Magnetic Fields

The transponder must remain functional when subjected to radiated magnetic fields as specified:

a. 150 µ Tesla DC field.

b. AC field as shown in Figure 7-6.

7.7 Magnetic

The transponder design shall minimize the use of magnetic materials and shall meet the following objectives when measured at a distance of 1 meter away:

a. Initial PERM: < 70 nT (nanoTelsa).

b. Post 1.5×10^{-3} Tesla Exposure: < 70 nT.

c. Post 5×10^{-3} Tesla Deperm: < 10 nT.

d. Induced magnetic field measurement: The induced magnetic field shall be measured while the transponder is turned off and exposed to a magnetic field test level of 0.6×10^{-4} Tesla. The measurement shall be made by a test magnetometer that can null the magnetic test field.

e. Stray magnetic field measurement: The transponder shall not produce dipole moments due to internal current flows in excess of 0.05 A m^2.

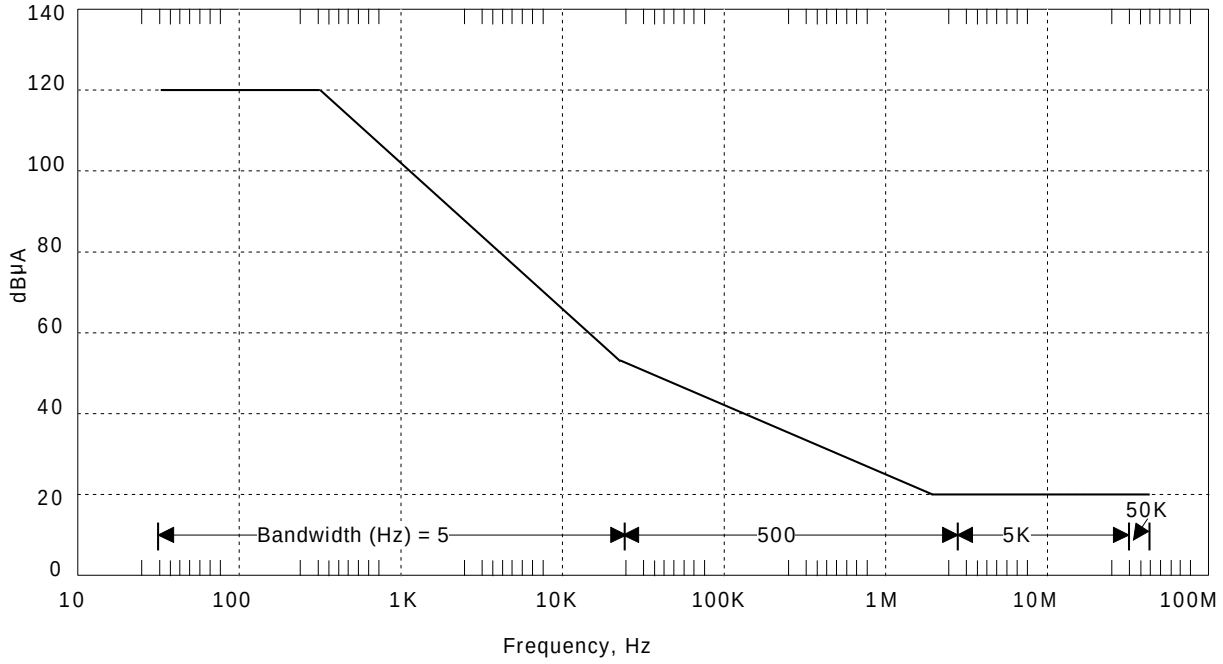

A0333011.DRW:E:N

Figure 7-1. Narrowband Conducted Emission Limits (CE01, CE03)

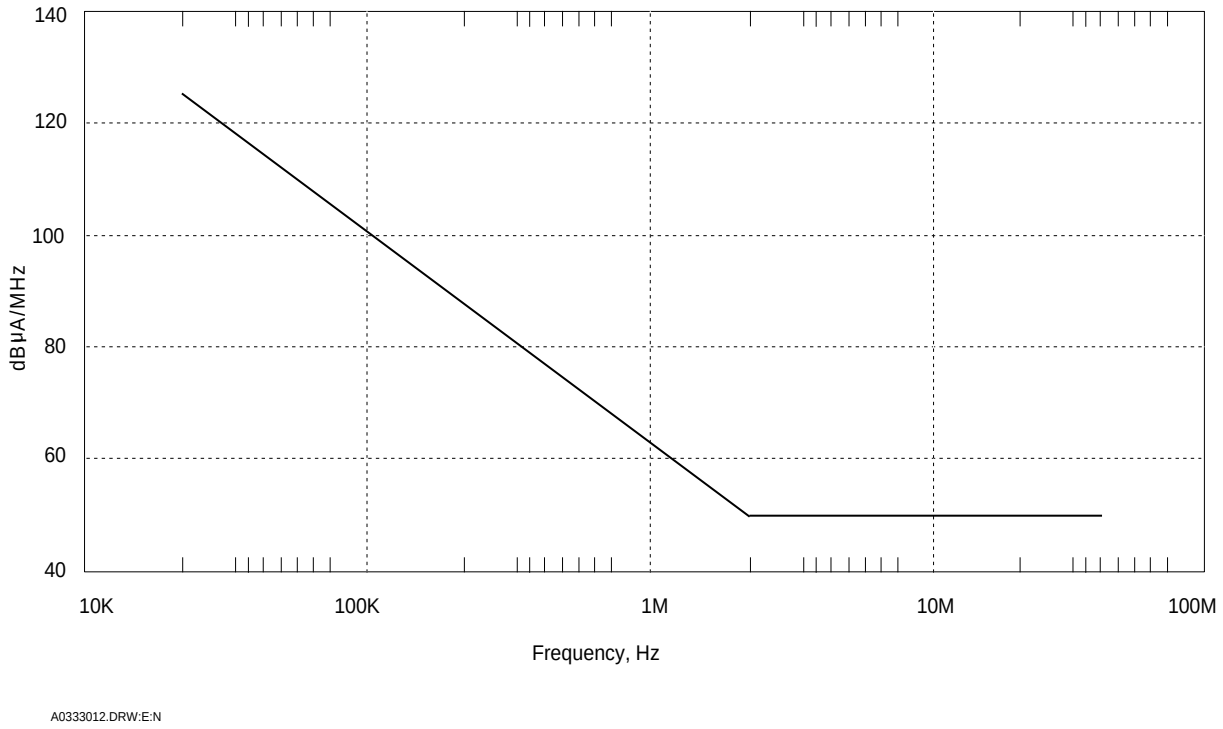

Figure 7-2. Broadband Conducted Emission Limits (CE03)

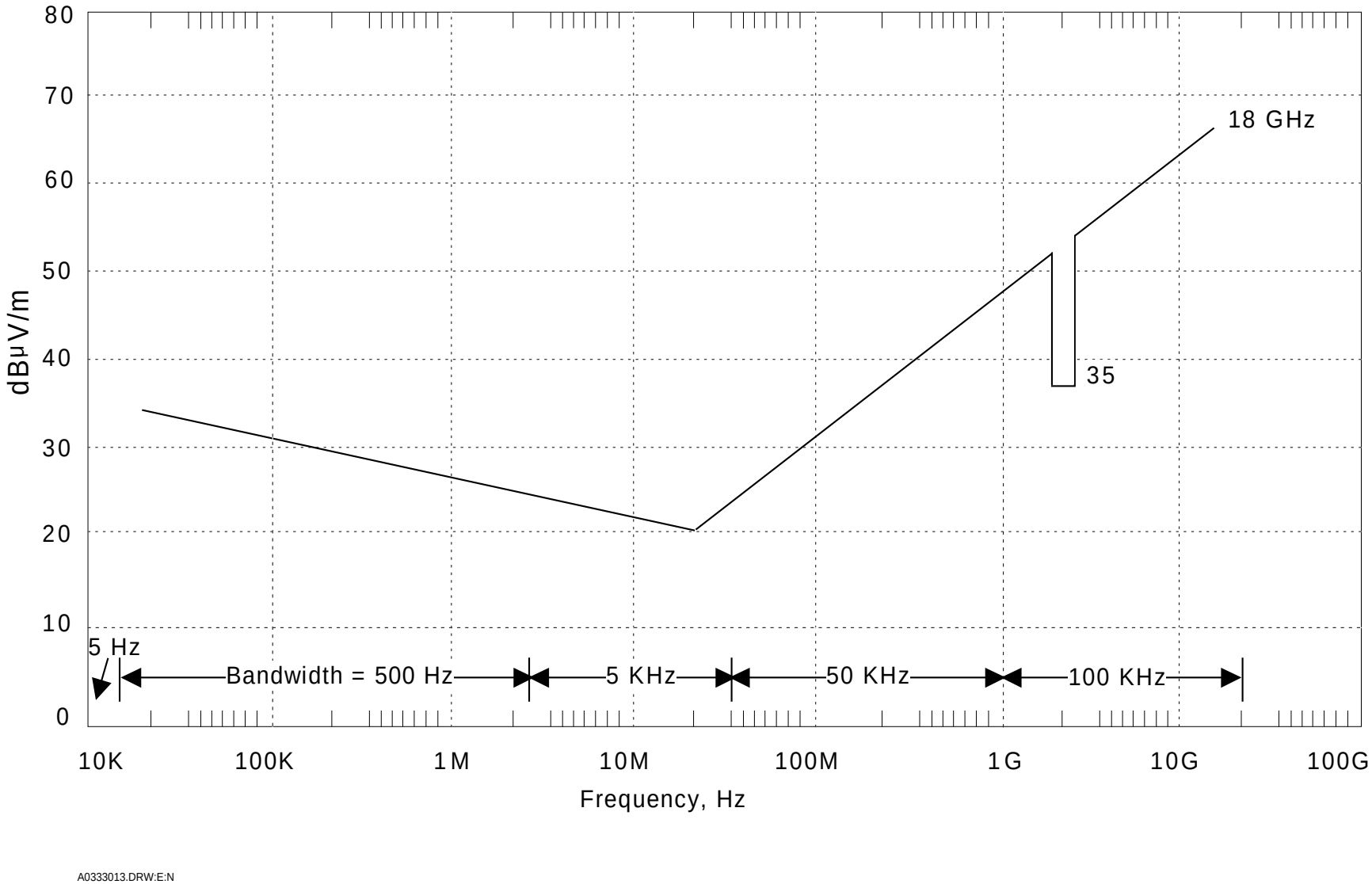

Figure 7-3. Narrowband E-field Radiated Emission Limits

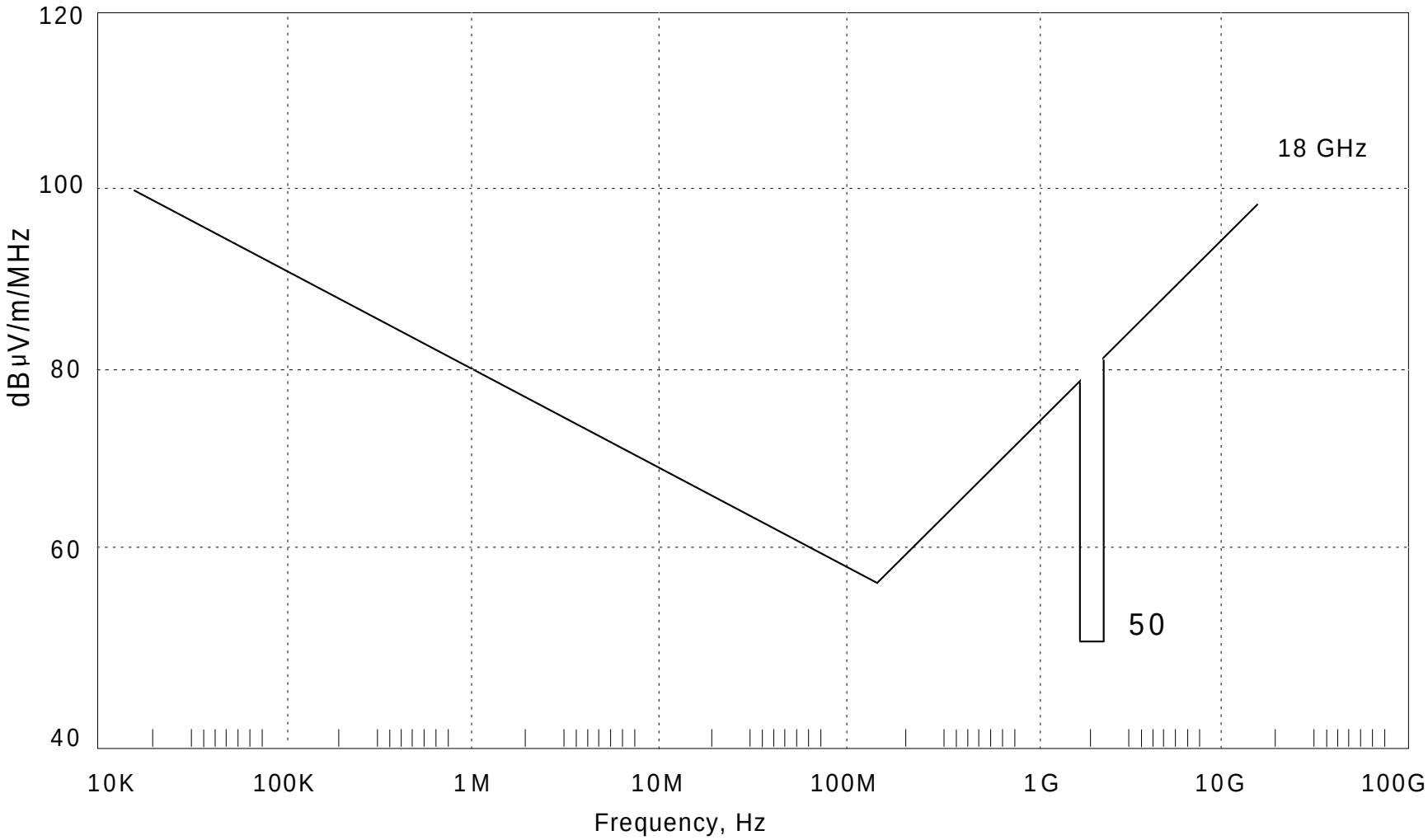

A0333014.DRW:E:N

Figure 7-4. Broadband E-field Radiated Emission Limits

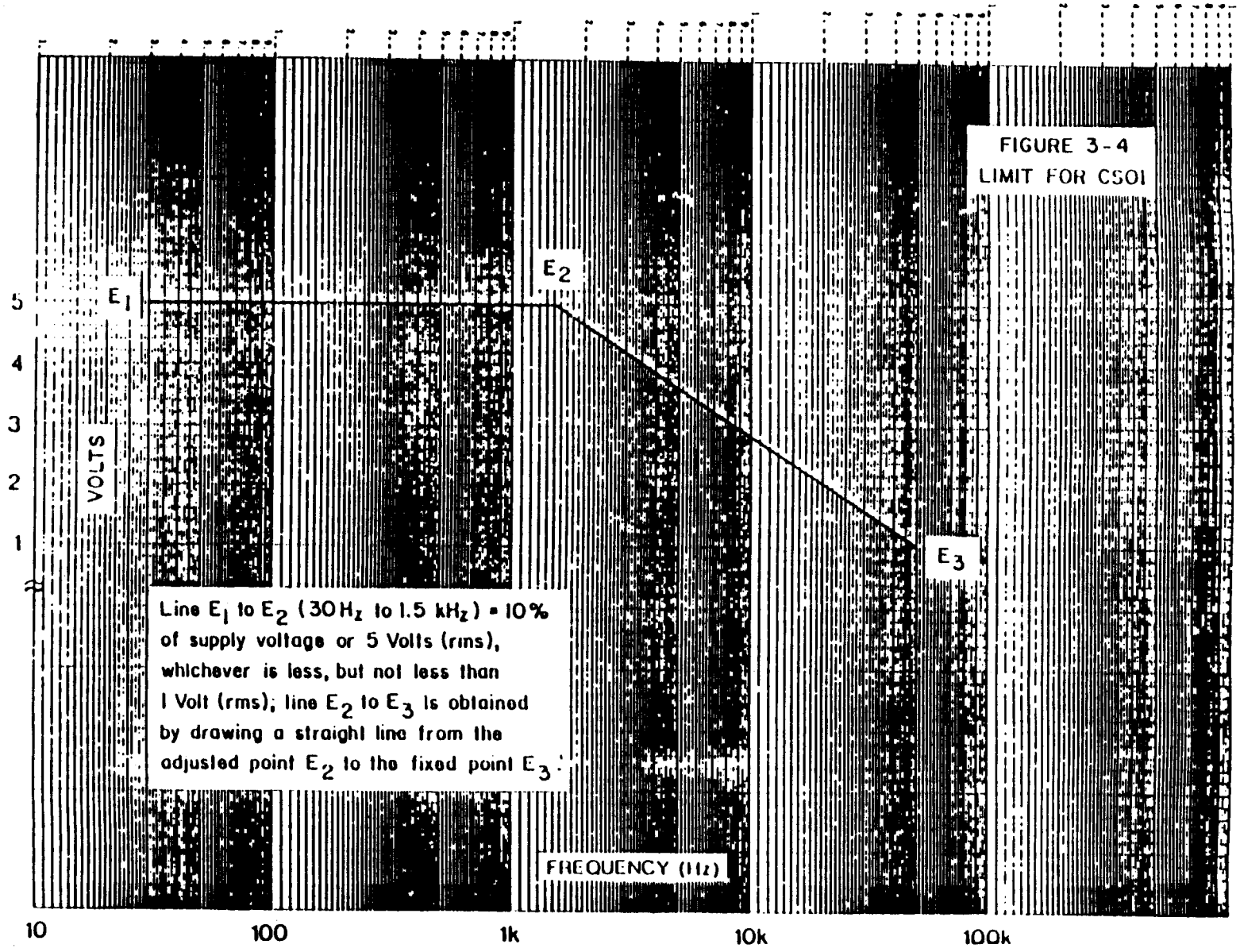

Figure 7-5. LIMIT FOR CS01

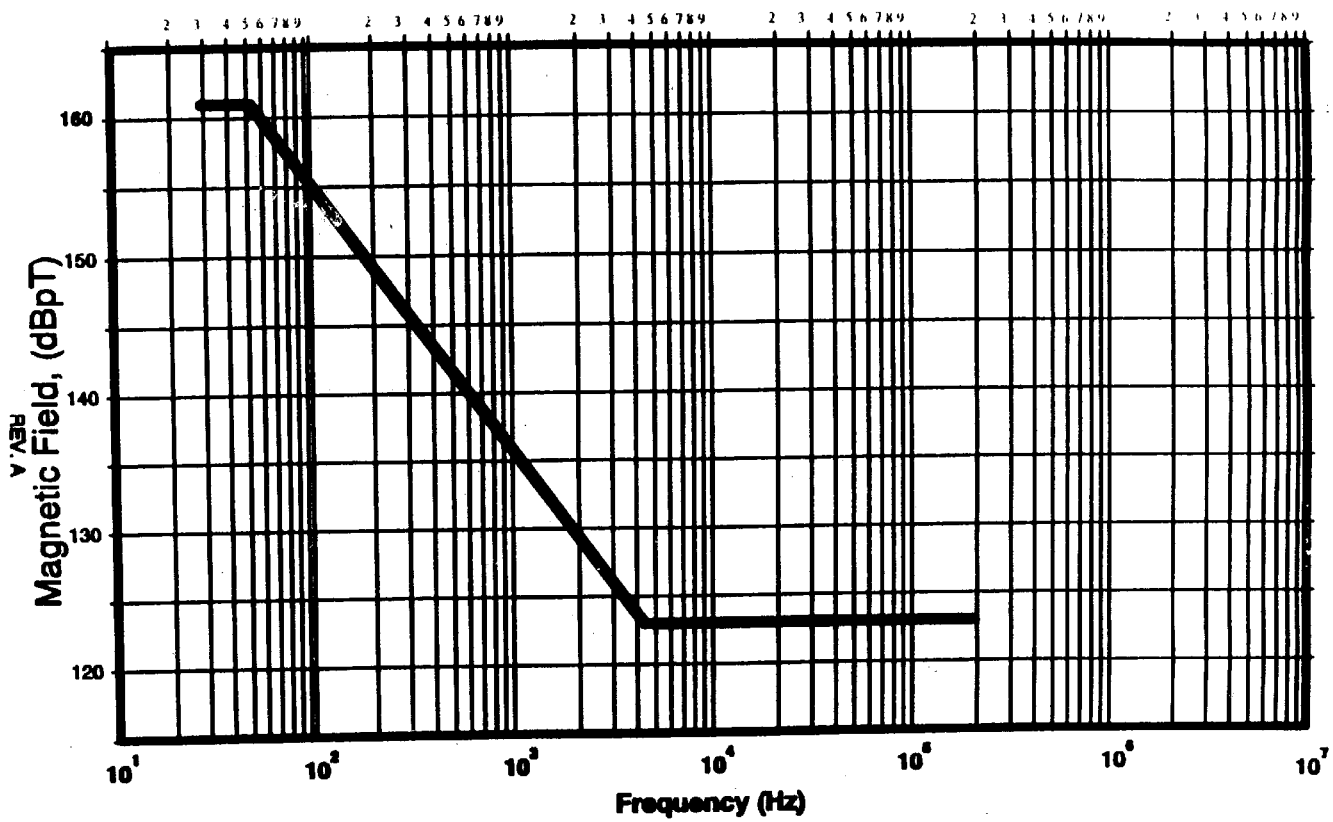

Figure 7-6. Radiated Susceptibility Limits, Magnetic Field (161 dBpT from 30 Hz to 50 Hz and 123 dBpT from4.46 kHz to 200 kHz)

Section 8. Ku-band Transmitter Performance and Interface Requirements

8.1 Ku-band Transmitter Requirements

8.1.1 General

The transponder shall provide a capability for a Ku-band transmitter module operating in DG2 mode 2 of the TDRSS KSA service. The transponder shall be designed such that the Ku-band transmitter module can be removed, if its usage is not needed, without impacting the operation of the remaining hardware.

8.1.2 Transmitter RF Power Output

Over the operational temperature range of -10 to 55 degrees C, the RF output of the Ku-band transmitter shall be 1 mWatt +1.0/-0.5 dB.

8.1.3 Output Impedance

The output impedance at the RF outputs will be 50 Ohms nominal with 1.5:1 VSWR maximum.

8.1.4 Transmitter Output Load VSWR

The transmitter must meet all performance requirements with a load VSWR not greater than 1.5:1 at any phase angle. It must not be damaged by application of any load from short to open circuit at any phase angle.

8.1.5 Output Radiation Spectrum

The PSD out of the transmitter relative to the peak PSD at the nominal center frequency must not exceed the limits shown in Figure 8-1.

8.1.6 Spurious and Harmonics

8.1.6.1 Inband Spurious

The root-sum square of all discrete spurious signals within ± 25 MHz of the nominal transmit signal frequency shall be less than 1.414 degrees rms when measured with a phase lock loop having a single-sided loop noise bandwith of 1 kHz and video bandwith of 25 MHz.

8.1.6.2 Harmonics and Out-of-Band Spurious

Harmonics and out-of-band spurious signals shall be 60dB below the unmodulated carrier.

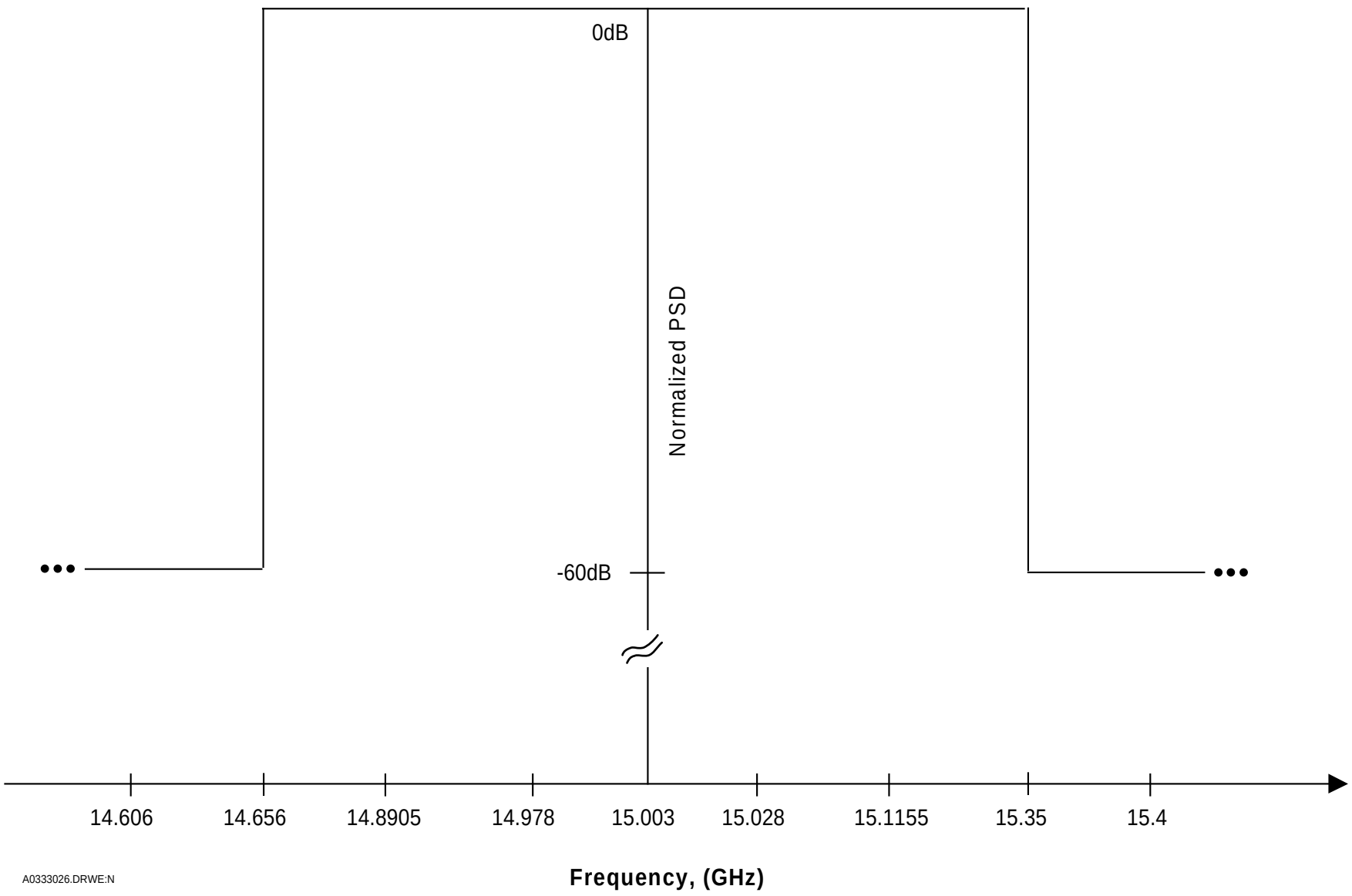

Figure 8-1. Ku-band Output Radiation Spectrum

8.1.7 Transmit Frequency Requirements

8.1.7.1 General

The transmitter frequency source shall be an internal TCXO.

8.1.7.2 Output Frequency

The transmitter center frequency shall be 15.003 GHz nominal with characteristics defined in paragraph 8.1.7.3.

8.1.7.3 Frequency Characteristics

a. Setability. The frequency shall be set at time of manufacture within ±0.5 parts-per-million (ppm) of the assigned channel center frequency at a baseplate temperature of 24 ±2 degrees C.

b. Short-term Stability. At any one temperature in the range from -20 to 65 degrees C ($^{\pm}$0.5 degrees C tolerance), the rms fractional frequency deviation over a 3-minute period, measured with a 1-second integration time, must not exceed 3×10^{-9}.

c. Long-term Stability. At any one temperature in the range from 10 to 40 degrees C (± 0.5 degrees C tolerance), the rms fractional frequency deviation must not vary more than the following limits with a 10-minute integration time:

   1. 1×10^{-7} over any 5-hour period.

   2. 3×10^{-7} over any 48-hour period.

d. Temperature Stability. At any temperature in the ranges shown below (± 0.5 degree C tolerance), the frequency variation must not exceed the following limits:

   1. From 10 to 40 degrees C: ±0.3 ppm.

   2. From -10 to 55 degrees C: ±1 ppm.

e. Aging Stability. At any one temperature in the range from 10 to 40 degrees C (± 0.5 degree C tolerance), the frequency must not vary more than ±3 ppm from the set value in a period of 1 year.

8.1.7.4 Phase Noise

The phase noise at the transmitter output must not exceed 3 degrees rms in the 1-kHz to 25-MHz band.

8.2 Ku-band Transmitter Performance

8.2.1 General

The transmitter must provide a single telemetry channel which is capable of handling the data format and symbol rates as defined in Appendix C. (The user is responsible for convolutional coding and for symbol interleaving, if required.) The transmitter must meet the requirements for TDRSS KSA DG2 mode 2 with BPSK capability only.

8.2.2 BPSK Modulation Performance

8.2.2.1 General

The performance requirements for the BPSK modulator, referred to the transmitter output, are specified in paragraphs 8.2.2.2 and 8.2.2.3.

8.2.2.2 BPSK Phase Imbalance

The phase imbalance between the two BPSK phase states relative to an ideal BPSK signal must not exceed 4 degrees.

8.2.2.3 BPSK Gain Imbalance

The amplitude imbalance between the two BPSK phase states must not exceed 0.20 dB.

8.2.3 Transmitter Distortion/Spurious Performance

8.2.3.1 General

The distortions of the transmitted signal encountered after BPSK modulation must meet the requirements of paragraphs 8.2.3.2 through 8.2.3.6.

8.2.3.2 Gain Flatness

The deviation from an ideally flat gain response must not exceed ±0.25 dB over a frequency range of ±80 MHz from the transmit frequency.

8.2.3.3 Gain Slope

The slope of the transmitter gain characteristic must not exceed ±0.05 dB/MHz over a frequency range of ±80 MHz from the transmit frequency.

8.2.3.4 Phase Nonlinearity

The deviation from ideal phase linearity must not exceed 2.12 degees over a frequency range of ±80 MHz from the transmit frequency.

8.2.3.5 AM/PM Conversion

The AM/PM conversion introduced between the modulator and the transmitter output must not exceed 6 degrees/dB.

8.2.3.6 Incidental AM

The sum of all amplitude modulation components not resulting from the BPSK modulation process must not exceed 3.5 percent peak.

8.2.3.7 Deleted

8.2.4 RF Bandwidth

The -3 dB bandwidth of the transmitter must be at least 50 MHz.

8.3 Ku-band Transmitter Interface Requirements

8.3.1 Status Telemetry Interface

8.3.1.1 General

The Ku-band transmitter status shall be provided to the spacecraft telemetry subsystem through the same MIL-STD-1773 interface bus specified in paragraph 4.4. The Ku-band transmitter status data shall be added to that interface as specified in paragraphs 8.3.1.2 and 8.3.1.3.

8.3.1.2 Analog Telemetry

The Ku-band transmitter analog telemetry shall follow the same conventions specified in paragraph 4.4.2. The analog telemetry data specified in Table 8-1 shall be added to Table 4-1.

Table 8-1 Ku-band Transmitter Digitized Analog Telemetry

RT Subaddress	Word	Parameter Name	Parameter Range	Number of Bits	Minimum Update Frequency (updates/sec)
1	5	Ku-band Reflected power	Antenna impedance of 50 Ohms to open circuit	8	1
1	5	Ku-band Transmitter power converter voltage	0 to 7 Vdc	8	1
1	6	Ku-band Module TCXO Temperature	-20 to 65 ˚ C	8	1/ 5
Deleted					

8.3.1.3 Bilevel Telemetry

The Ku-band transmitter bilevel telemetry shall follow the same conventions specified in paragraph 4.4.3. The bilevel telemetry data specified in Table 8-2 shall be added to Table 4-2.

Table 8-2 Ku-band Transmitter Bilevel Telemetry

RT Sub-address	Word	Bit Assig-nment	Function	False State (Bit=0)	True State (Bit=1)	Sampling frequency (samples /sec)
2	2	00	Ku-band Transmitter On (KTXON)	Ku-band Transmitter power control has been set to OFF state	Ku-band Transmitter power converter ON/OFF control line has been set to the ON state	5

8.3.2 Mode Control Interface

The Ku-band transmitter shall be commanded to the desired configuration through the same MIL-STD-1773 interface bus specified in paragraph 4.5. The Ku-band transmitter control signals specified in Table 8-3 shall be added to the control signals specified in Table 4-6.

Subaddress 4, Word 1, bits B3 through B5 shall control the Ku-Band transmitter ON/OFF command. If bit B3 is 1 (enabled) the transponder shall execute the command defined by B4 and B5. When B4 is 1 and B5 is 0, power will be unconditionally applied to the transmitter. If B4 is 0 and B5 is 1, power shall be removed unconditionally from the transmitter. If bit B3 is 0 (disabled), the transponder shall ignore bits B4 and B5. The power-up condition shall be Transmitter OFF.

Table 8-3. Mode Control Signals

RT Subaddress	Word	B5	B4	B3	Control Word Function
4	1	0	1	1	Ku-band Transmitter ON
4	1	1	0	1	Ku-band Transmitter OFF

8.3.3 Primary Power Interface

8.3.3.1 Power Control

The Ku-band transmitter shall be powered from a separate power input line and it must be switched on and off internally under control of the mode control input as specified in paragraph 8.3.2.

8.3.3.2 Electric Power Input

The specifications of the electric power input are described in paragraphs 4.6.2 through 4.6.9, except paragraph 4.6.4 on maximum input power. The maximum dc power consumption of the Ku-band transmitter will not exceed 5 watts, over the temperature range of -20 to 65 degrees C.

8.3.4 Telemetry Data Interface

8.3.4.1 General

The transponder shall provide a single TDRSS telemetry channel for the Ku-band transmitter. The interface characteristics shall be as specified in paragraphs 8.3.4.2 and 8.3.4.3.

8.3.4.2 Input Signal Characteristics

a. The transponder must meet the performance requirements specified in paragraph 8.2 when the input logic levels are as follows:

   1. High state: +3.5 volts (+1.5/-1.0 volts).

   2. Low state: 0 volts (±0.5 volts).

b. The rise and fall times of the input data as measured at the 10 and 90 percent points must not exceed 10 percent of a symbol duration.

c. Data asymmetry, as measured at the 50 percent points, must not exceed 2 percent.

8.3.4.3 Input Impedance

The input impedance of the inputs must be either 50 ohms ±10 percent, 1000 ohms ±10 percent, or 5000 ohms ±10 percent. The desired value will be specified at the time of manufacture.

8.3.5 Programming Interface

The programming interface specified in paragraph 4.8 shall be unaffected by the addition of the Ku-band transmitter module.

8.4 Ku-band Transmitter Mechanical and Physical Requirements

The Ku-band transmitter module shall conform to the mechanical and physical requirements specified in Section 5, and the following requirements:

a. Footprint. When the Ku-band transmitter module is attached, the transponder dimensions, as specified in paragraph 5.2.1, will be modified to expand up to 5.0 cm in one direction.

b. Weight. The maximum weight of the transponder assembly and band reject filter, as specified in paragraph 5.3, must increase no more than 450 grams when the Ku-band transmitter module is attached.

c. RF Connectors. The Ku-band transmitter output shall all use SMA connectors.

d. Operational life. The Ku-band transmitter must survive 50,000 ON/OFF cycles throughout the transponder's operational life.

8.5 Ku-band Transmitter Environmental and Electromagnetic Interference Requirements

When the Ku-band transmitter is integrated into the transponder, the transponder shall conform to the environmental and electromagnetic interference requirements specified in Sections 6 and 7 of this document.

Appendix A. TDRSS S-band Forward Link Signal Parameters

Appendix A. TDRSS S-band Forward Link Signal Parameters

Parameter	Definition
TDRS transmit carrier frequency (Hz)	F
Carrier frequency arriving at user spacecraft (Hz) (refer to note)	F_r
Command channel radiated power / Range channel radiated power Ratio	10 dB
Range Channel	
Carrier frequency	Command channel carrier frequency delayed $\pi/2$ radians
PN modulation	PSK, $\pm \pi/2$ radians
Carrier suppression	30 dB minimum
PN chip rate	Synchronized to command channel PN chip rate
PN code length (chips)	$(2^{10} - 1) \times 256$
PN code epoch reference	All 1's condition synchronized to the command channel PN code
PN code family	Truncated 18 stage shift register sequences
Command Channel	
Carrier frequency (Hz)	Transmit carrier frequency (F)
PN modulation	PSK, $\pm \pi/2$ radians
Carrier suppression	30 dB minimum
PN code length (chips)	$2^{10} - 1$
PN code family	Gold codes

Parameter	Definition
PN chip rate (chips/sec)	$\frac{31}{221 \times 96} \times F$
Data format	NRZ
Data rate restrictions	MA: 0.1 - 10 kb/sec SSA: 0.1 - 300 kb/sec
Data modulation	Modulo-2 added asynchronously to PN code

NOTE

Except during scheduled periods of Doppler compensation inhibit, $F_r = f_o \pm E$; where f_o = nominal center frequency of user spacecraft receiver and E is defined:

$R < 10$ m/sec^2	10 m/sec$^2 < R < 15$ m/sec^2
E = 700 Hz	E = 1100 Hz

Appendix B. TDRSS S-band Return Link Signal Parameters

Appendix B. TDRSS S-band Return Link Signal Parameters

Parameter	Definition
Transmit carrier frequency (Hz) DG1	F_t
Q/I Channel Power Ratio	1:1, 2:1, or 4:1
DG1	
PN modulation Modes 1 and 2 Mode 3, I channel	SQPN PSK, $\pm$ /2 radians
PN code length (chips) Modes 1 and 3	$(2^{10} - 1) \times 256$
Mode 2	$2^{11} - 1$
PN code epoch reference Mode 1 I channel	All 1's condition synchronized to all 1's condition of received forward link range channel
Q channel (note 1)	All 1's condition delayed x + 1/2 PN chips relative to I channel epoch
Mode 2 I channel Q channel	Spacecraft oscillator Delayed 1/2 PN chip period relative to I channel epoch
Mode 3, I channel	Same as mode 1, I channel
PN code family Modes 1 and 3	Truncated 18 stage shift register sequences
Mode 2	Gold codes
Data format Without convolutional coding	NRZ-L, NRZ-M, NRZ-S, Bi0-L, Bi0-M, Bi0-S
With convolutional coding (note 2)	NRZ-L, NRZ-M, NRZ-S
Data modulation Modes 1 and 2	Modulo-2 added asynchronously to PN code

Parameter	Definition	
DG1 (cont)		
Mode 3		
I channel	Modulo-2 added asynchronously to PN code	
Q channel	PSK, $\pm\pi/2$ radians	
PN chip rate (chips/sec)	$\frac{31}{240 \times 96} \times F_t$	
	MA	SSA
Mode 1 data rate restrictions		
Total (note 3)	0.1 - 50 kb/sec	0.1 - 300 kb/sec
I channel	0.1 - 50 kb/sec	0.1 - 150 kb/sec
Q channel	0.1 - 50 kb/sec	0.1 - 150 kb/sec
Mode 2 data rate restrictions		
Total (note 3)	1 - 50 kb/sec	1 - 300 kb/sec
I channel	1 - 50 kb/sec	1 - 150 kb/sec
Q channel	1 - 50 kb/sec	1 - 150 kb/sec
Mode 3 data rate restrictions (note 4)		
Total (note 3)	I + Q	I + Q
I channel	0.1 - 150 kb/sec	0.1 - 150 kb/sec
Q channel	1 kb/sec - 1.5 Mb/sec	1 kb/sec - 3 Mb/sec
Carrier (F_t) reference (Hz)		
Modes 1 and 3	$\frac{240}{221} \times F_r$	
Mode 2	Spacecraft oscillator	

NOTE

1. Q channel PN code is identical to I channel PN code offset x + 1/2 PN chips, where x ≥ 20,000. Value of x is determined by code and tap connection assignments for a particular user spacecraft.

2. At the option of the user, the output of the convolutional encoder may be NRZ to Bi∅-L converted.

3. Data signals on I and Q channels may be independent and asynchronous. If the I and Q channel data signals are independent, the sum of the data rates on the I and Q channel must not exceed the total. For MA modes 1, 2, and 3 convolutional coding is used in all cases. At the option of the MA user, the output of the convolutional encoder may be converted from NRZ to Bi∅-L with no reduction in data rate. For SA, maximum data rates for the I channel, the Q channel, and the total are reduced by a factor of 2 when data is either biphase formatted or rate 1/2 convolutionally encoded. Also, for SA, the maximum data rates for the I channel, Q channel and the total are reduced by a factor of 4 when data is rate 1/2 convolutionally encoded and then biphase formatted.

4. For MA users, mode 3 is available only when supported by SSA service.

Appendix C. TDRSS KSA Return Link Signal Parameters

Appendix C. TDRSS KSA Return Link Signal Parameters

Parameter	Definition
Data modulation (note 1)	BPSK
Data format Without convolutional encoding	NRZ-L, NRZ-M, NRZ-S, Biϕ-L, Biϕ-M, Biϕ-S
With rate 1/2 convolutional encoding (note 2)	NRZ-L, NRZ-M, NRZ-S
Data rate restriction (note 3)	1 kb/sec - 25 Mb/sec

NOTE

1. Only partial KSA return service with a single channel capability is provided.

2. At the option of the user, the output of the user spacecraft convolutional encoder may be NRZ to Bi∅-L converted. This format conversion capability can be used only with data rates $\leq$ 5 Mb/sec.

3. Stated data rate is for uncoded data. Maximum data rate is reduced by half if rate 1/2 convolutional coding is used. Transmitter design will limit the maximum data rate to 25 Mb/sec. The TDRSS can support up to 100 Mb/sec.

Appendix D. Amplitude and Phase Conventions for TDRSS Services

Appendix D. Amplitude and Phase Conventions for TDRSS Services

Service	Convention
Forward Link	Amplitude and phase: Range channel carrier phase lags the command channel by 90 degrees. $\frac{\text{Command channel power}}{\text{Range channel power}} = +10\text{ dB}$
Return Link	Phase: When identical data is being transmitted on the I and Q channels, the I channel phase must lead the Q channel phase by 90 degrees. For Bi0-L data or asynchronous data on the I and Q channels, no phase constraints apply.

Appendix E. S-band Diplexer Performance Requirements

Appendix E. S-band Diplexer Performance Requirements

E.1

When an external diplexer is employed with the transponder, as shown in Figure E-1, it must meet the following minimum requirements to ensure that receiver performance is not degraded beyond specified limits.

Diplexer Parameter	Frequency	Attenuation
Image Rejection	$F_{image} \pm 10$ MHz	≥ 70 dB
Half IF Rejection	$F_{half\ IF} \pm 10$ MHz	≥ 40 dB
Transmit Rejection	$F_t \pm 10$ MHz	≥ 80 dB
Out-of-band Rejection	F_t to 16 GHz	Sufficient to keep power ≤ - 50 dBm
Transmit/Receive Isolation	$F_r \pm 6$ MHz	≥ 20 dB
Gain Flatness	$F_r \pm 6$ MHz	≤ 0.2 dB

E.2

Maximum diplexer losses must be ≤ 0.55 dB in the transmit leg and ≤ 0.65 dB in the receive leg.

E.3

The remaining transponder performance requirements can be extrapolated from the receiver and band reject filter ports to the diplexer port by simple loss and VSWR calculations relating to the specific diplexer employed. Care must be taken not to exceed the requirements stated in paragraph 3.8.4.

E.4

The maximum power handling of the diplexer must be 20 watts at the input of the transmit leg in vacuum.

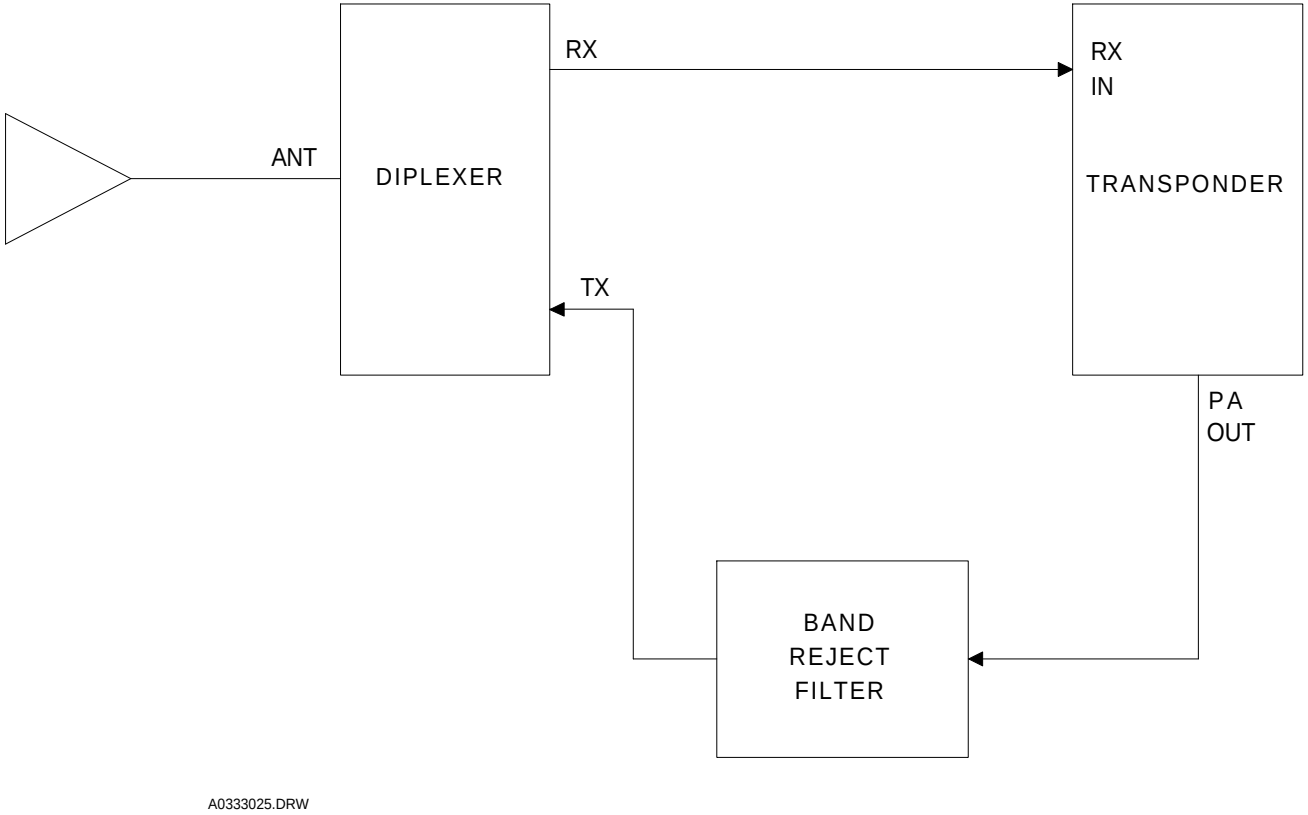

Figure E-1. Diplexer/Transponder System Configuration

Appendix F. Standard Digital Interface Using RS-422

Appendix F. Standard Digital Interface Using RS-422

1. RS-422 Digital interfaces using frequencies between 0 to 12 MHz shall be compliant with EIA RS-422A, and shall use the interface circuit shown in Figure F-1.

2. The interface shall use series terminating resistors of 200 ohms at the driving end in circuits which cross-strap drivers to receivers.

3. Ony the electrical interface of the RS-422 shall be implemented, excluding the interface protocol.

4. A true or logical 1 state shall correspond to a binary 1, and a false or logical state shall correspond to a binary 0.

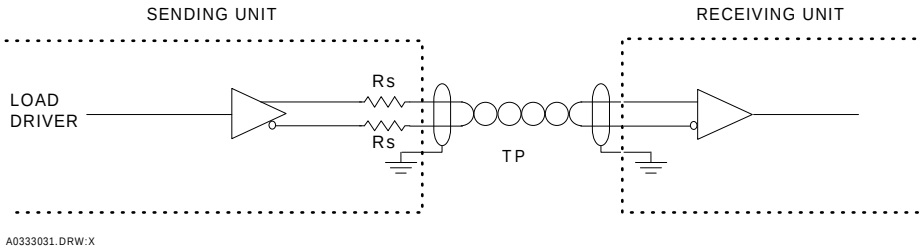

Figure F-1. RS-422 Interface Circuit

NOTE

1. Cable characteristics impedence (ZO) = 100 Ohms.
2. Twisted pair = TP.
3. Proposed RS-422 Driver = 26CT31 or 26C31 (Harris) or equivalent.
4. Proposed RS-422 Receiver = 26CT31 or 26C32 (Harris) or equivalent.
5. RS-422 Driver output impedence (RO) = 15 ohms typical.

Appendix G. MIL-STD-1773 Interface

Appendix G. MIL-STD-1773 Interface

G.1 MIL-STD-1773 Interface

G.1.1

The MIL-STD-1773 is a fiber optic medium used to transfer command and telemetry. The protocol used (MIL-STD-1773) is the fiber-optic implementation of the MIL-STD-1553 protocol. The MIL-STD-1773 uses a bus controller to control and initiate all bus activity. The data on the bus consists of command, data, and status words. Each word is twenty bits long, and the most significant bit is transmitted first starting with the sync bits (see Figure G-1). The MIL-STD-1773 terminal converts electrical MIL-STD-1553 signals to optical MIL-STD-1773 signals for transmission over the fiber optic bus. The signals are carried over the data bus serial digitally and are transmitted point to point in half duplex. The binary signals are a proportional voltage to light or light to voltage conversion transmitted over the medium as: a low light level or a completely off condition and a high light level. These levels represent a logical "0" and a logical "1", respectively.

G.1.2

To connect directly to the data bus the user needs a MIL-STD-1553 protocol chip and a MIL-STD-1773 Terminal or Honeywell integrated parts. The optical characteristics of the terminal are summarized in Table G-1:

Table G-1. 1773 Terminal Characteristics

Item	Description
Optical connector	SMA 905
Optical wavelength	850 nanometers
Fiber size to be used	100/140 micrometers
Coding	Manchester
Receiver optical sensitivity (with 100/140 micron fiber)	-33 dBm (0.5 μW) minimum -30 dBm (1.0 μW) typical
Transmitter optical output power (with 100/140 micron fiber)	-8.4 dBm (116 μW) minimum -9.4 dBm (145 μW) typical

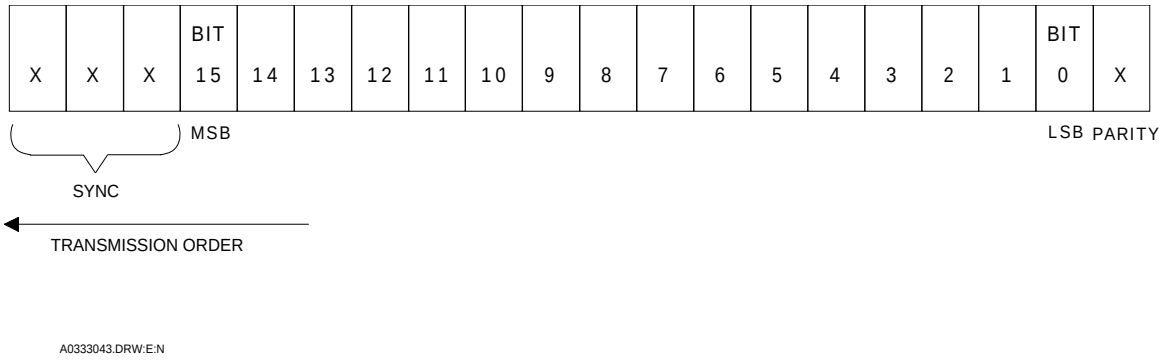

Figure G-1. 1773 Data Word Structure

G.1.3

The power requirements of the terminal are as follows:

a. Voltage: +5 volts ± 10 percent.

b. Ripple: 100 mV maximum.

c. Power (max): 450 mV.

G.2 Terminal Connection

Four connectors are provided to the bus; two connectors each side, one for receive and one for transmit. Two of the connectors go to the prime bus, while the other transmit receive pair is connected to the redundant bus. These provide the signal, power, and ground interface to the terminal. (See Figure G-2.)

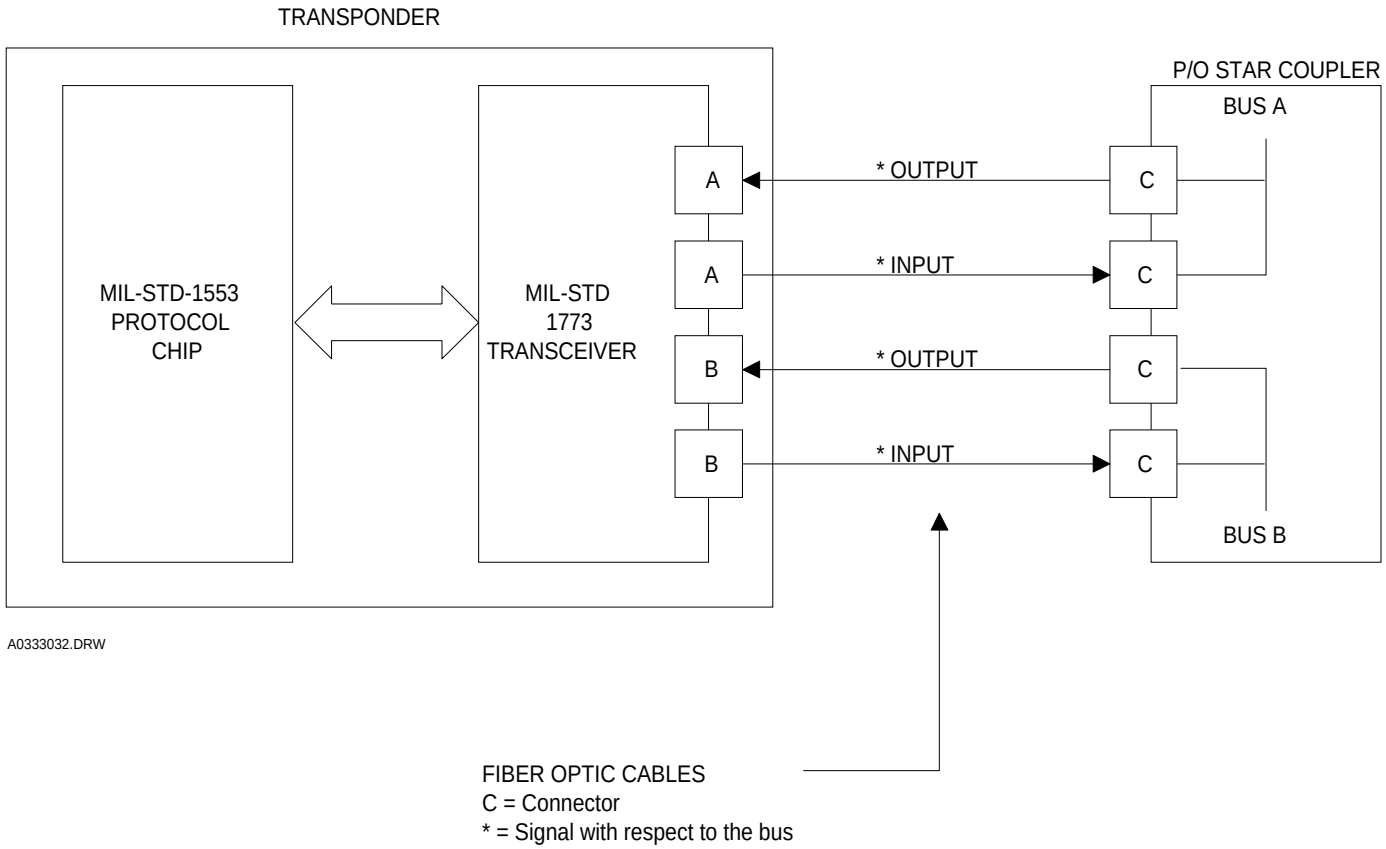

Figure G-2. MIL-STD-1773 Interface

Appendix H. Essential Services Node: GSFC's MIL-STD-1773 Interface

Appendix H. Essential Services Node: GSFC's MIL-STD-1773 Interface

H.1 Overview

GSFC has developed a generic MIL-STD-1773 interface circuit to provide spacecraft subsystem designers with a simple solution for converting digital and analog interfaces to MIL-STD-1773. This eliminates the need for each subsystem design team to engineer a custom MIL-STD-1773 interface and reduces the familiarity required of the MIL-STD-1773 hardware and software components.

The GSFC MIL-STD-1773 circuit supports multiple types of I/O interfaces and can easily be utilized for the transponder application. A block diagram for the suggested transponder status telemetry and command interface is shown in Figure H-1.

H.2 GSFC MIL-STD-1773 Circuit

The GSFC MIL-STD-1773 circuit consists of a multi-chip module (MCM), two PROMS, one oscillator, two 1773 hybrid transceivers, and various decoupling capacitors. The MCM contains a GSFC developed component named the Essential Services Node (ESN). The ESN MCM incorporates eight multiplexed 1.0 mA current sources, fifteen A/D channels with 10-bit resolution, and an ASIC to support the various types of I/O including a MIL-STD-1553 interface. The PROM and oscillator for the MCM circuitry reside external to the multi-chip module.

The MIL-STD-1773 hybrid transceivers are pin-grid array modules that conform to the industry standard 1553 transceiver footprint. The MIL-STD-1773 modules are single channel units and each have two fiber-optic pigtails, with terminus for mounting.

The parts list for the GSFC MIL-STD-1773 circuit is shown in Table H-1. The power, weight, and size of each component is appropriately identified. This information should be incorporated as required into the electrical, mechanical, and thermal details of the transponder design.

The power requirements for the complete GSFC MIL-STD-1773 circuit design are specified as follows:

Power: 4.0 Watts maximum, 1.0 Watt nominal for 1 Hz telemetry, 0.5 Watt standby.
Voltage Input: +5.0 Volts and +/- 15 Volts, 100 mV p-p ripple, $\pm$3 percent regulation.

These values are related to the ESN's ability to be in sleep mode when it is not being utilized. A MIL-STD-1773 command can "wake up" the ESN and process the transponder status telemetry request or command function.

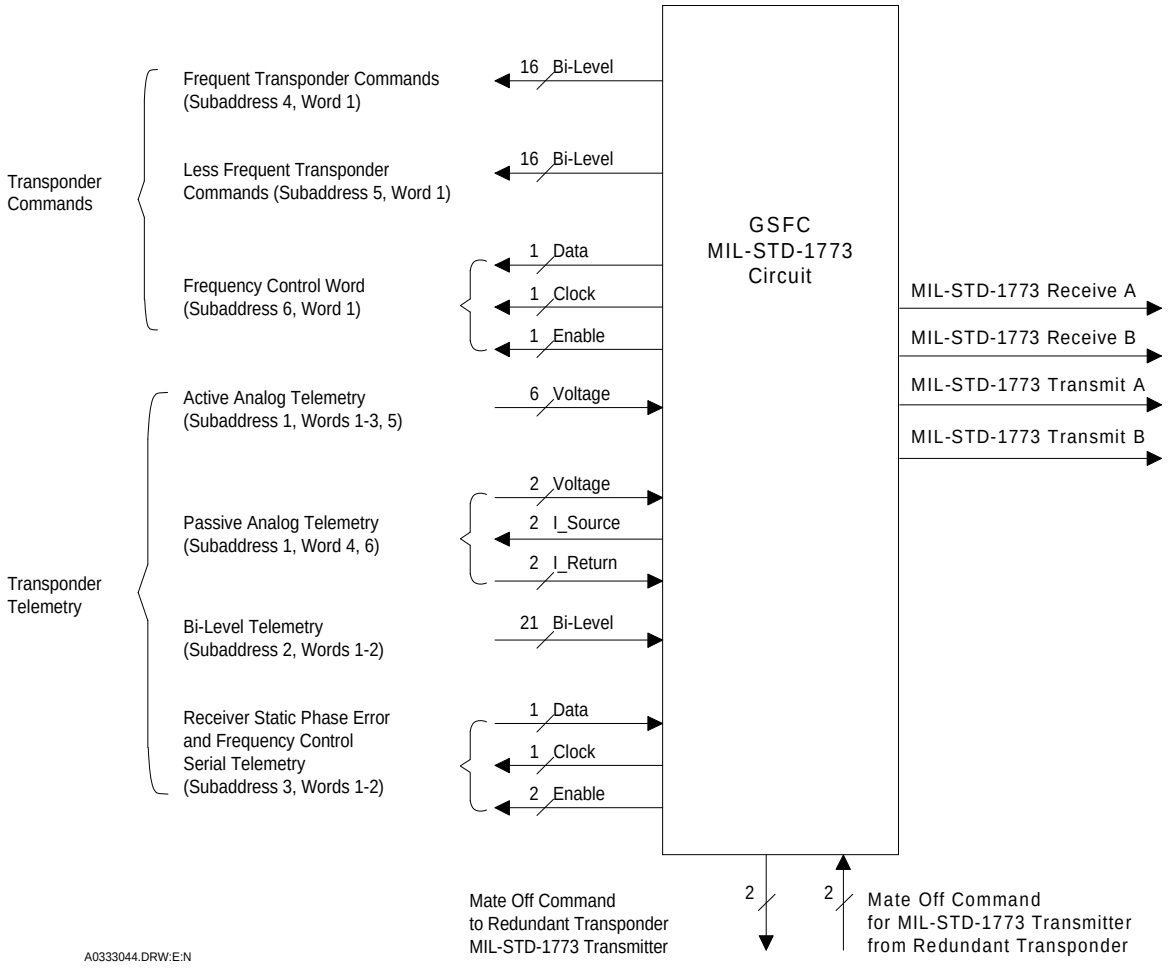

Figure H-1. Transponder-to-GSFC MIL-STD-1773

Table H-1. GSFC MIL-STD-1773 Circuit Parts List

Item	Qty.	Part Number	Description	Supplier	Ojc	Est. Weight	Est. Size
1	1	KD-F91566 (Package)	ESN MCM (Kyocera 308 pin QFP)	GSFC	22°C/W	39 g	2.77 SQ. x .20 H
2	2	2301460	MIL-STD-1773 Hybrid Transceiver	SCI Systems	See Note 1	20 g EA	1.27 SQ. x .25 H EA
3	2	Hn58V1001FP-25	128K x 8 EEPROM	Hitachi	55°C/W	5 g EA	.83 x .57 x .12 EA
4	1	M55310/26-B36A12	12 MHz CMOS Oscillator (100mW Max)	Q-Tech	36°C/W	5 g EA	.88 x .51 x .20 H EA
5	9	M123A11BXB473KS	0.047 µF, 50V Ceramic Chip Capacitor	Kemet	-	-	.14 x .12 x .07 H EA
6	2	CWR06FC685KS	6.8 µF, 10V Tantulum Chip Capacitor	AVX	-	-	-
7	4	54ACQ273LM	Octal D Flip Flop	National	20 °C/W	5g EA	0.35 SQ.X0.06 EA

Note 1: Operating Case Temp: 75° C max

H.3 Essential Services Node Firmware

This firmware needed to operate the ESN shall be developed by GSFC personnel to support the transponder status telemetry and command MIL-STD-1773 interface. An Interface Control Document (ICD) shall be jointly developed between the transponder vendor and GSFC (the transponder vendor has the primary responsibility for this task) to ensure that the transponder MIL-STD-1773 data requirements are satisfied. The firmware will be delivered in PROMs.

H.4 Spacecraft Bus Controller Simulator

All spacecraft subsystems with MIL-STD-1773 interfaces shall be tested using a bus controller simulator that accurately models the on-board bus controller for each mission. A bus controller simulator can easily be established with an 80x86 computer and commercially available MIL-STD-1553/1773 protocol boards. The MIL-STD-1773 boards require a full 32-bit bus slot. (Note: Some MIL-STD-1773 boards require a second, adjacent slot, but not for an electrical connection to the PC bus.) Commercial software is packaged with the MIL-STD-1773 PC boards, allowing for the bus controller to be programmed as desired. However, GSFC shall provide the relevant simulator software setup information specific to each mission. This information ensures that the designer is testing the subsystem interface exactly as it will be exercised on the spacecraft. GSFC shall provide one MIL-STD-1773 protocol PC board and programming software, as government furnished equipment to the transponder vendor.

* The bus controller software setup is mission-specific. Every transponder shall be tested with, at a minimum, the bus controller software that is specific to the mission for which the transponder is developed.

Abbreviations and Acronyms

CCB	Configuration Control Board
C/N_o	carrier-to-noise density ratio
CW	continuous wave
dc	direct current
DCN	documentation change notice
MA	multiple access
MSB	most significant bit
NASA	National Aeronautics and Space Administration
NRZ	non-return to zero
PA	power amplifier
PN	pseudorandom noise
PSK	phase shift key
QPSK	quadrature PSK
rf	radio frequency
RFI	radio frequency interference
SC/N_o	subcarrier-to-noise density ratio
SLE	signal level estimate
SN	Space Network
S/N_o	signal-to-noise density ratio
SSA	S-band single access
STDN	Spaceflight Tracking and Data Network
STS	Space Transportation System
TDRSS	Tracking and Data Relay Satellite System
T_o	absolute time delay
TTL	transistor-to-transistor logic
TCXO	temperature-compensated crystal oscillator
USO	ultrastable oscillator
VSWR	voltage standing wave ratio

Distribution List

Organization	Name of Recipient	Copies

To be supplied.

531-RSD-IVGXPDR

Performance and Design Requirements and Specification for the Fourth Generation TDRSS User Transponder