TDRS H, I, J
Topics of this Presentation

- HIJ Spacecraft Differences From 1-7
- Ground Terminal Changes
- Operations Differences

HIJ How It Differs From 1-7

- On Board Beam Forming for MA
- Ka 650 MBPS Capability
- Collocation Ability
- N-S Station Keeping Not Required
- 80 Bit Command Structure
- Variable ETO With Function
- 16 Selectable Crypto Keys

TDRS Spacecraft Subsystems

- STS - Structural/Thermal
- PS - Propulsion
- EPS - Electrical Power
- SAS - SA/SGL Antenna
- CES - Communications Electronics
- TRS - TT&C RF
- ACS - Attitude Control
- TCS - T&C Digital

On Board Beam Forming

- MA-CES RF Interfaces
- S/C Simplified Block Diagram
- MA Forward Electronics Block Diagram
- MA Return Electronics Block Diagram

MA-CES RF Interfaces

- MAR
  - 6 Ku-band SGL downlinks to MAS
    - Converter designed such that any channel from 13405.0 to 13522.5 MHz may be used (7.5 MHz steps)
- MAF
  - 1 Ku-band SGL uplink from MAS
    - 2 channels, one at 14816.4 MHz and second at 14826.4 MHz

S/C Simplified Block Diagram

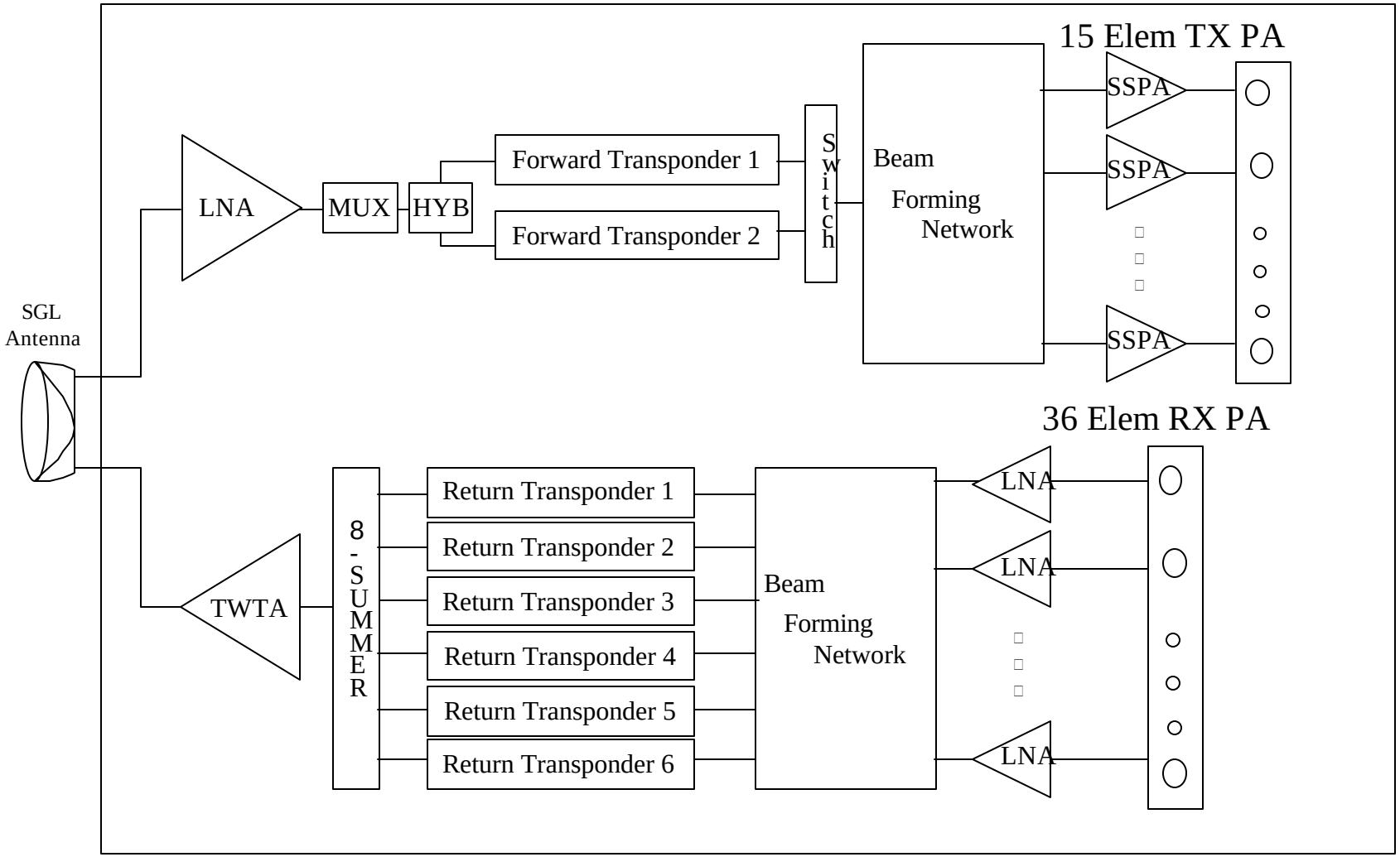

MA Forward Electronics Block Diagram

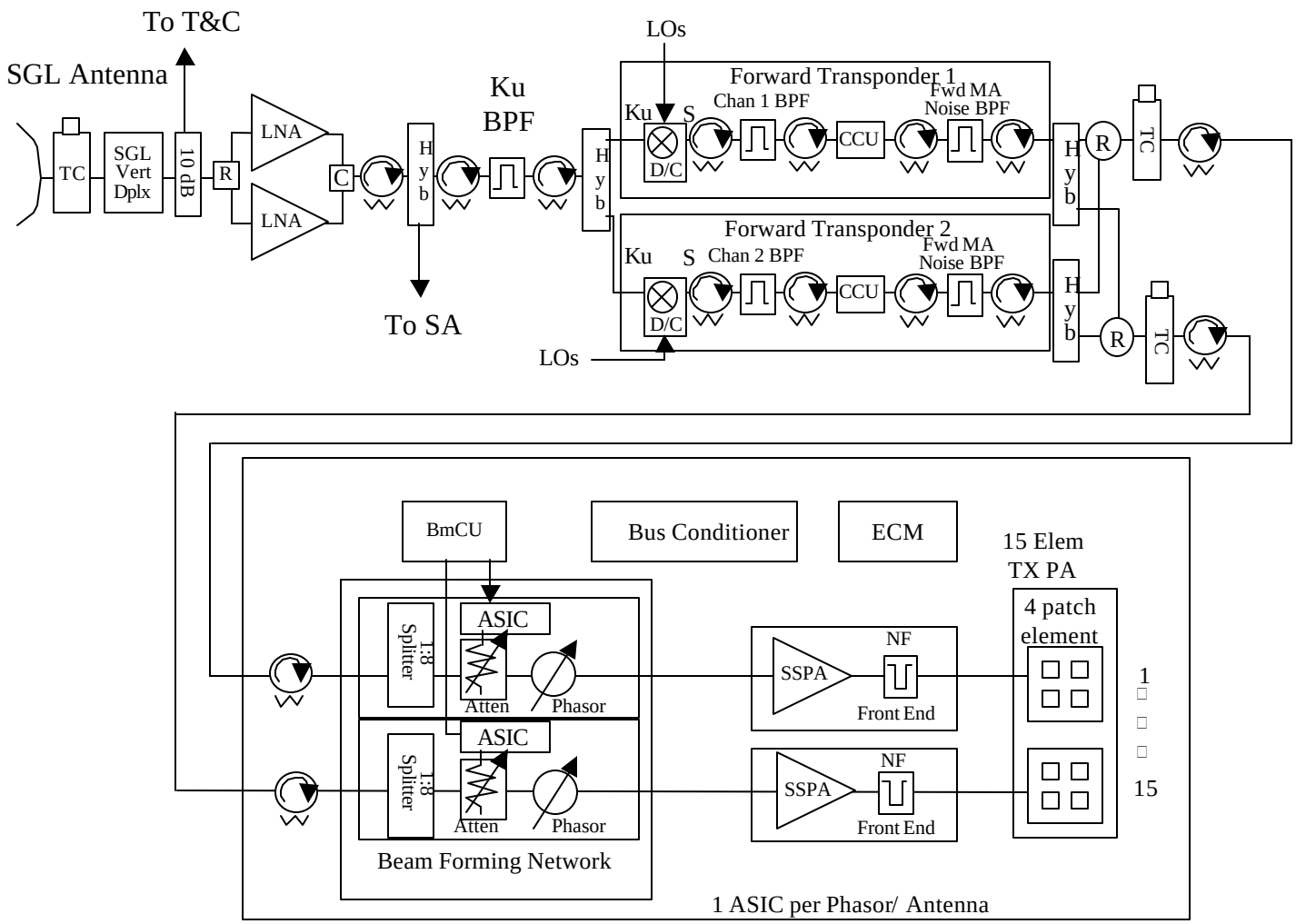

MA Return Electronics Block Diagram

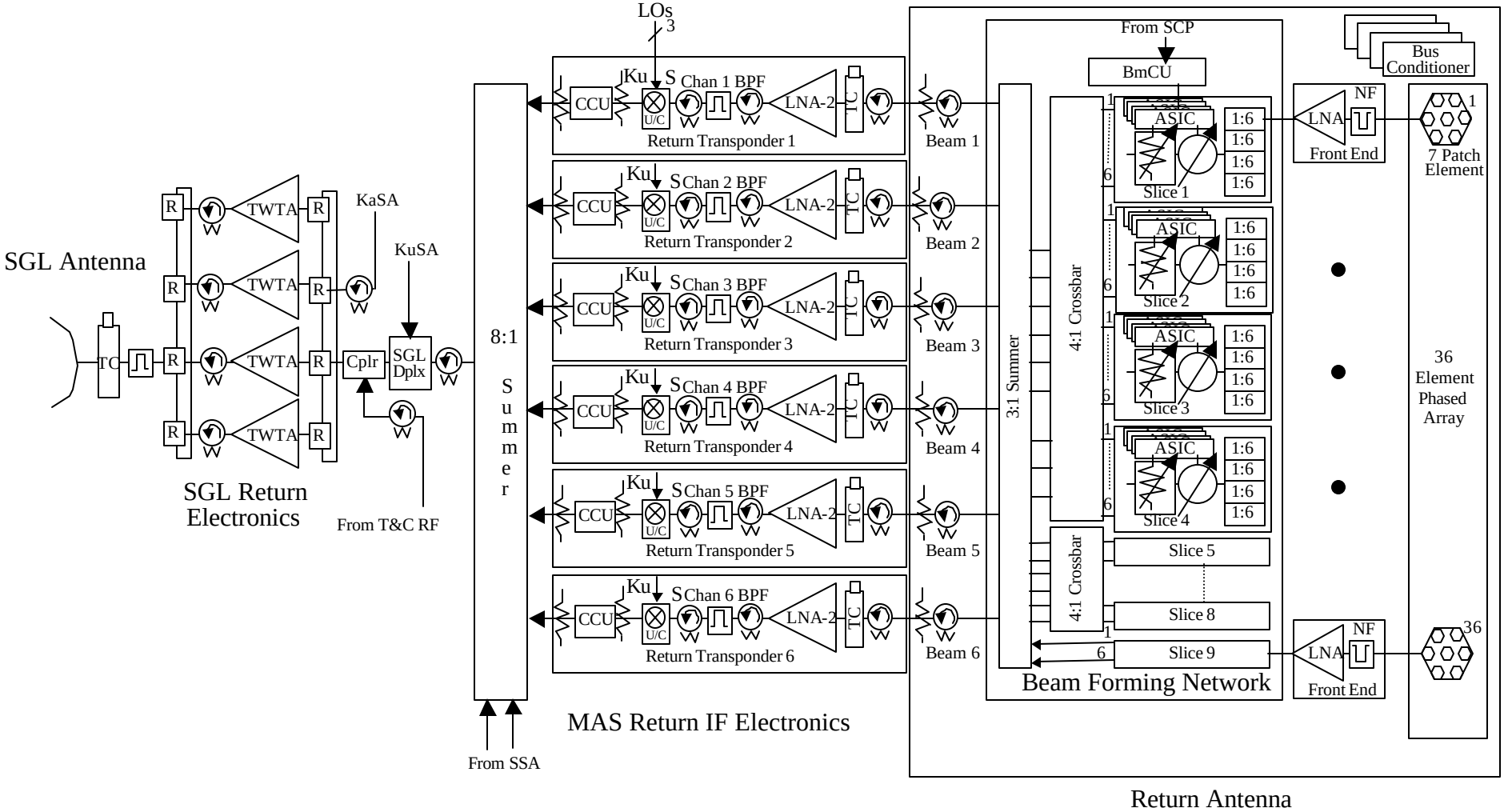

KaSA Downlink Frequencies

- 225 MHz channel

  Pol 1: 13528.4 MHz

  Pol 2: 13928.4 MHz

  Note: These are shared with KuSA downlink

- 650 MHz Channel

  Pol 1: 13720 MHz

Note: All freq. $\pm$ 2.1 MHz.

KaSA SSL Frequencies

- Forward: 25253.4 to 27478.4□0.7 MHz

  in 25 MHz steps

- Return: 22550.0 to 23545.0□0.7 MHz

  in 5 MHz steps

Collocation Ability

- New command and telemetry frequencies

  Cmd 1 - 14785.9625 MHz.

  Cmd 2 - 14780.4375 MHz.

  Tlm 1 - 13731.0 MHz.

  Tlm 2 - 13725.0 MHz.

- No-Pilot carrier, command carrier used for frequency reference

TT&C Exciter Changes

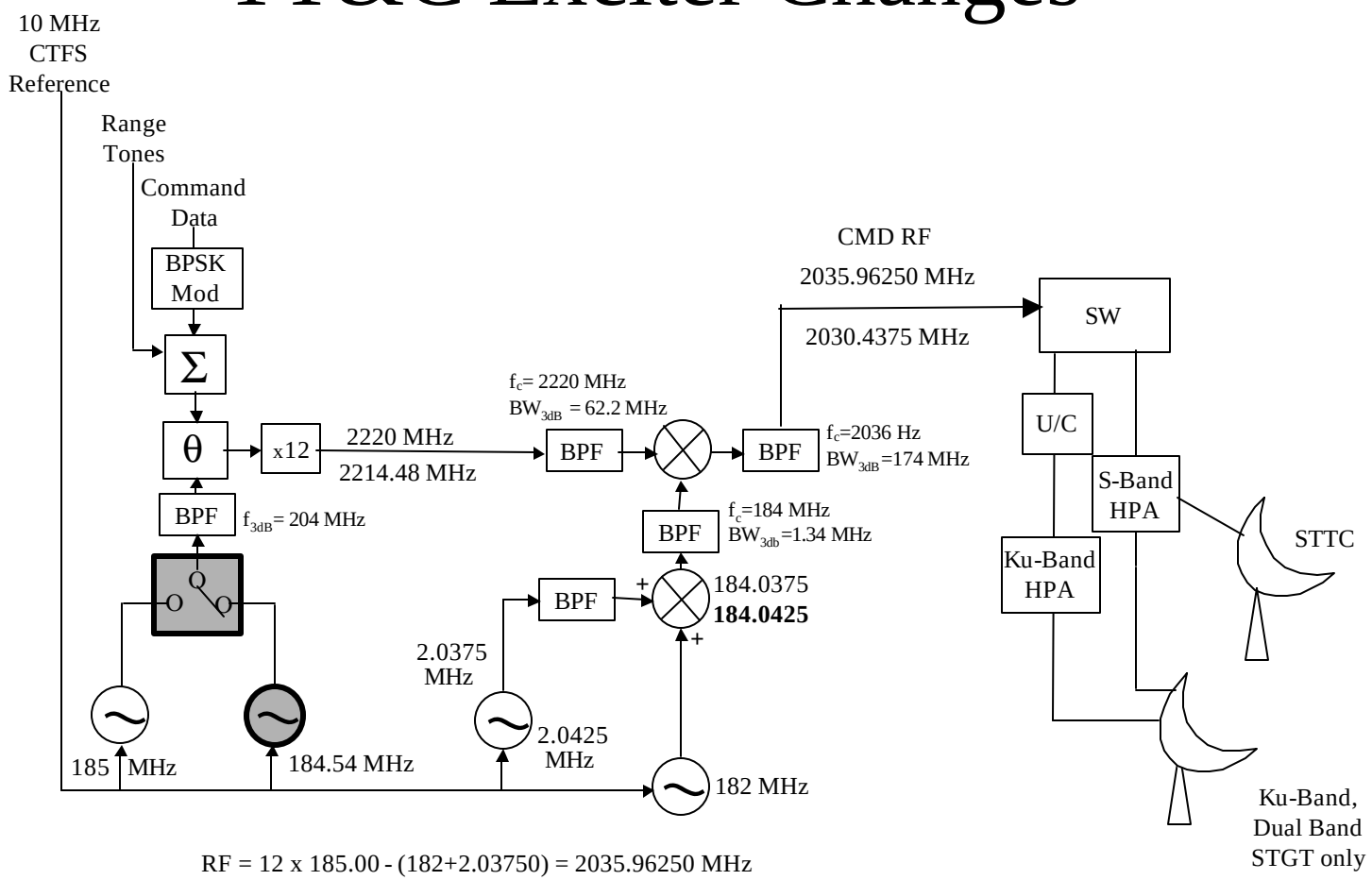

RF = 12 x 185.00 - (182+2.03750) = 2035.96250 MHz
RF = 12 x 184.54 - (182+2.04250) = 2030.4375 MHz

= New hardware for TDRS H,I,J

N-S Station Keeping Not Required

- Launched into 28° inclined highly elliptical transfer orbit.

  4 perigee burns and 4 apogee burns will be used to circularize orbit and reduce inclination to 7° which will decay toward 0° and then rebuild to less than 7° after 14 years

- 18.16 Kg of propellant allocated for station keeping over life of S/C

- 33.88 Kg of propellant allocated for maximum of 3 station changes over life of S/C

80 Bit Command Structure

- Types of command
  - Pulse Command
  - Serial Command
  - SWSI Command
  - TCU Internal Command
  - Data Load
  - RT2 Execute
  - Type 0

80 Bit Command Structure Cont'd

- Common header 24 bits long
  - 16 bit header
  - 2 bit CTCU
  - 2 bit fill
  - 4 bits command type

80 Bit Command Structure Cont'd

- 40 bit midsection with variable content based on command type.
- Common Trailer 16 bits long (except type 0)
  - 8 bits spacecraft address
  - 1 bit fill
  - 7 bits Polycode

Variable ETO With Function

- Nominal 10 Minutes at power up

  Reset every 90 seconds under normal conditions

- 24 hours used for initial launch phase

Ground System Changes

- New Command Generator for 80 Bit Structure
- MA Ground Segment Changes

MA Ground Segment Changes

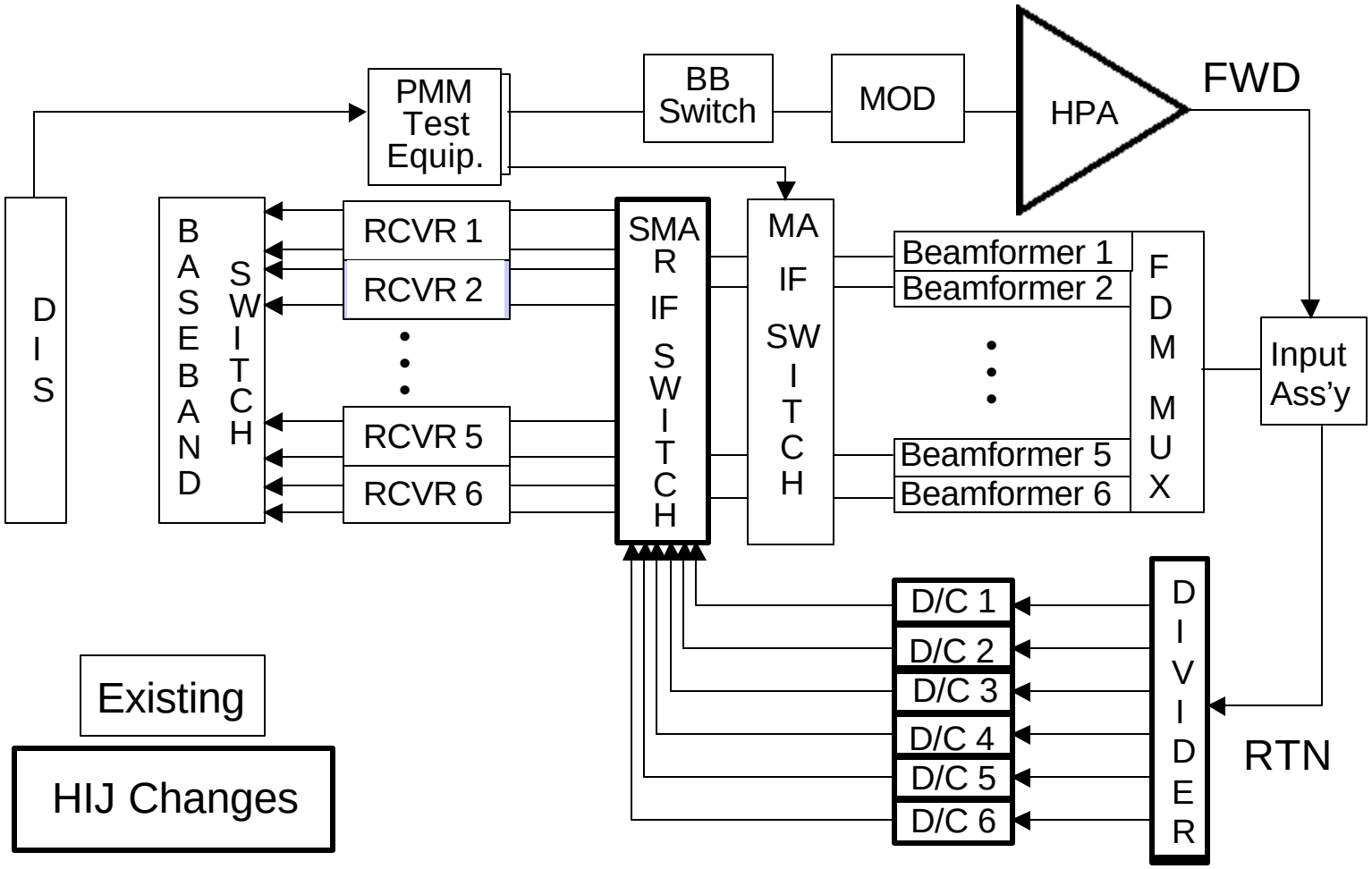

Operations Changes

- Message Definitions
- H,I,J Unique Requirements

Message Definitions

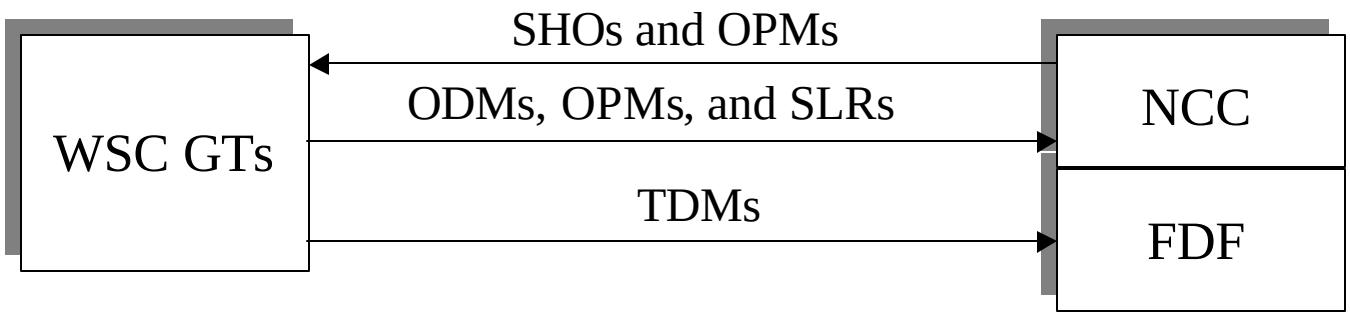

Message	Function	To	FROM
SHO	▪ Request/define normal and simulation service	WSC	NCC
ODM	▪ Report on status of active service	NCC	WSC
TDM	▪ Provide User/TDRS tracking data	FDF	WSC
OPM	▪ Provide User/TDRS ephemeris data ▪ Modify an active service	WSC	NCC
OPM	▪ Message acknowledgement ▪ Maneuver requests ▪ SHO/OPM status	NCC	WSC
SLR	▪ Report GT and TDRS equipment availability	NCC	WSC

H,I,J Unique Requirements

Section	Change Description
SHO Ground Rules	▪ MA services apply to TDRS 1-7 only ▪ SMA and KaSA services apply to TDRS H-J only ▪ No simultaneous Ka and KUSA services on same SAA ▪ No tracking services on Ka-Band
EET Ground Rules	▪ EET for KaSA services is N/A
OPM Ground Rules	▪ MA OPMs apply to TDRS 1-7 only ▪ SMA and KaSA OPMs apply to TDRS H-J only
SHO Subheader 1	▪ New SMA, KaSA2, and KaSA2 service support subtypes
SHO Services	▪ Common SMA and MA forward service parameters ▪ Common SMA and MA return service parameters _SSA combining MA for SMA _New SMA return link ID (n/a for SSA) _New SMA value for cross-support forward link ▪ Common KaSA and KSA fwd and rtn service parameters ▪ New SMA values for normal and cross-support tracking